SL-T2528RGBIC-L110

DATA SHEET

SPEC.NO. : SZ18092602
DATE : 2018/09/26
REV. : A/0

Approved By: Checked By: Prepared By:

1 ɻ˛ ɜ 3
2 ɻ ǀ 3
3 ɻ 3
4 ɻ˛ ɜ 4
5 ɻ˛ ɜ

6. Pin function Ŕ ˈ Є

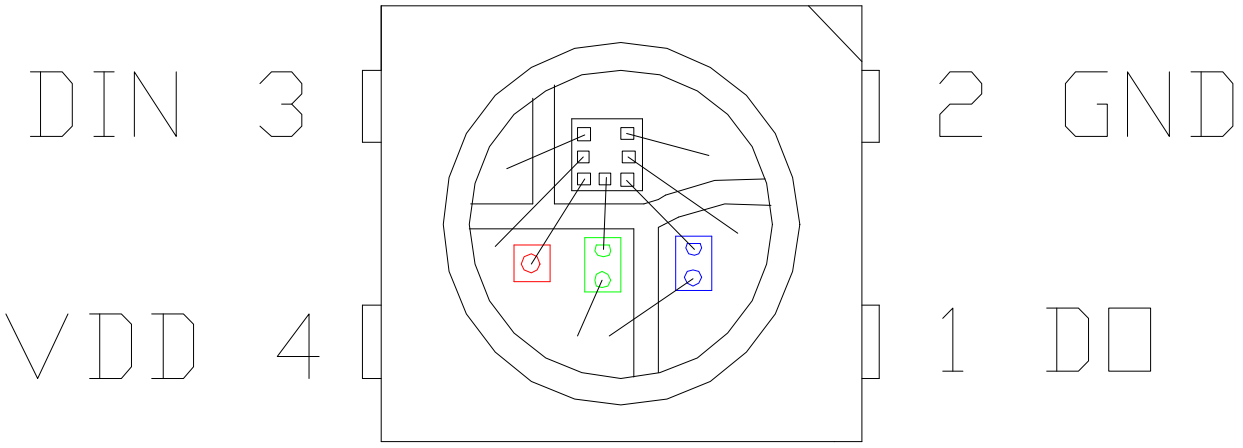

`	`	O	ˈ
1	DO	ƻ	┼ Ḫ ` ƻ
2	GND	غي	Ḫ ` م غي غي
3	DIN	ŋ̃	┼ Ḫ ` ŋ̃
4	VDD		ɵ Ï PCB ƿ ɷ ɵ ˜ Ȁ

7. Electro-optical characteristics at Ta=25 ŏ Ŕ RGB Ǫ Є

Item	Symbol Ŕ ` Є		Mix Ŕ Є	Typ Ŕ شج Є	Max Ŕ Є	Unit Ŕ ˥ ʳ Є	Conditions Ŕ ŁЄ
Dominant wavelength Ŕ I Є	î d	G	520		525	nm	IF=12mA
		R	620		625		
		B	465		470		
Luminous intensity Ŕ ȉ Ǫ Є	IV	G	800		1200	mcd	IF=12mA
		R	200		400		
		B	150		300		

L

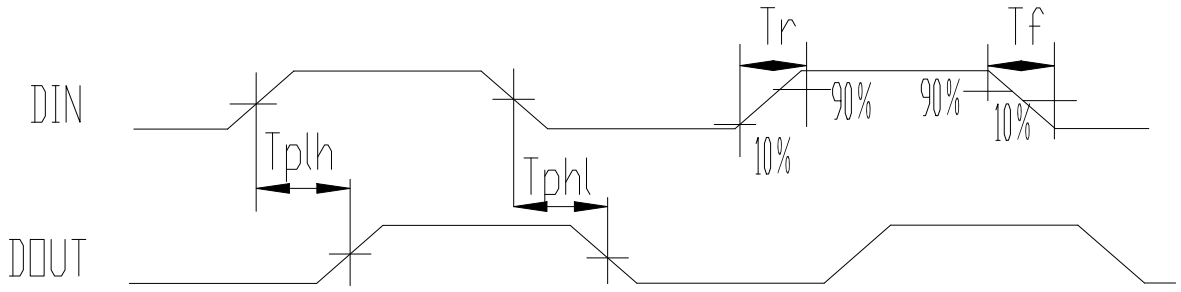

11.The data transmission time

2528RGBIC					
T `	Code	Min	Typical	Max	Unit
TOH	0 Ï	245	295	345	ns
TOL	0 Ï u	545	595	645	ns
T1H	1 Ï	545	595	645	ns
T1L	1 Ï u	245	295	345	ns
Trst	Reset Ï u	80	--	--	us

12. Temporal waveform figure

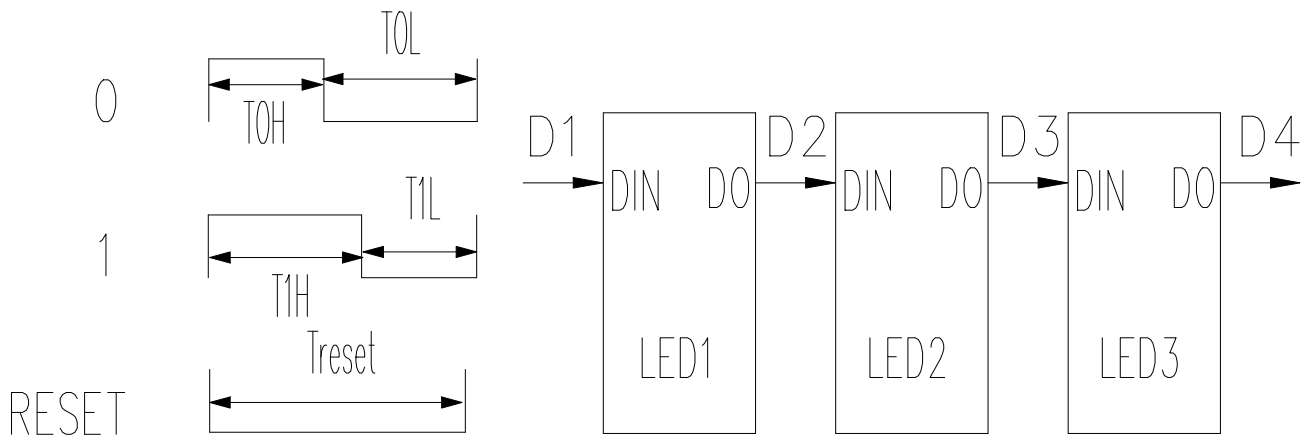

LIGHT

13. Mode of data

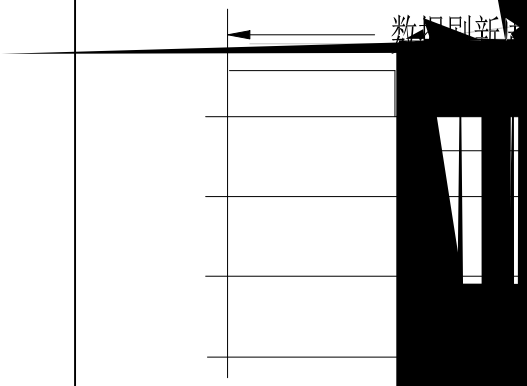

LIG

17. Packaging Specifications

d Feeding Direction

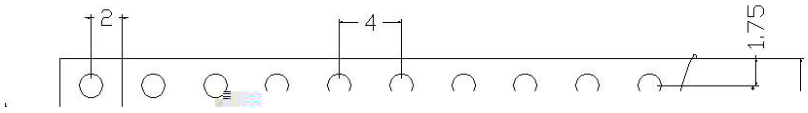

E178x12mm

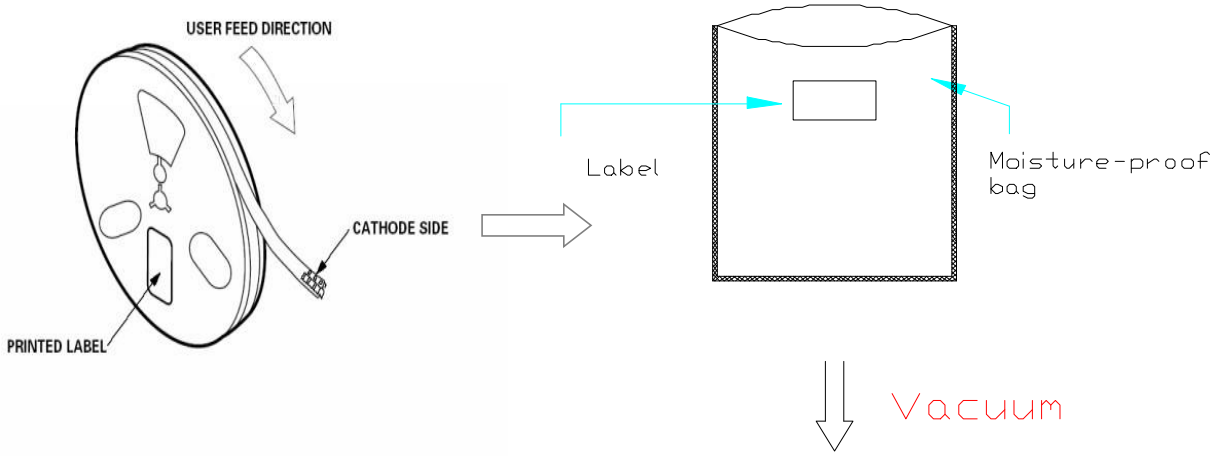

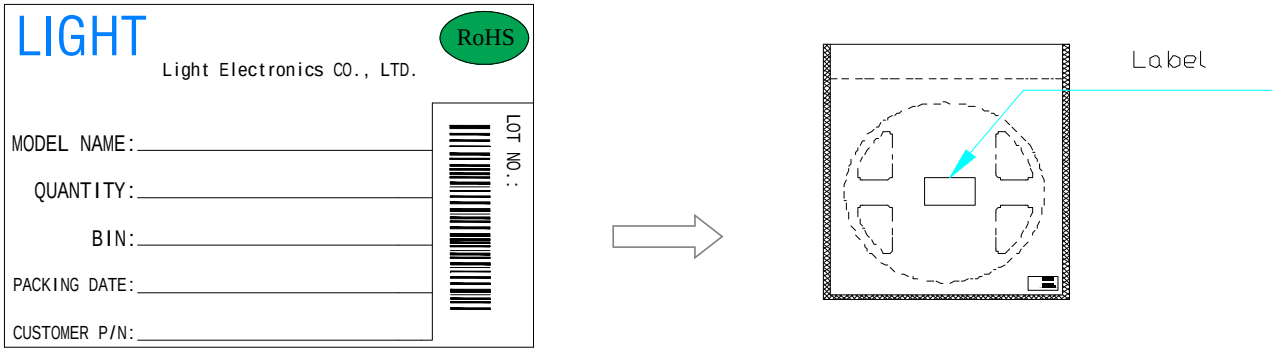

Note: volume is 2000pcs; 2000pcs

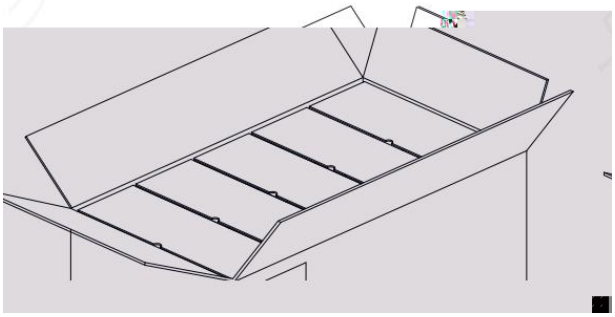

18. Reliability Ѓ˜ Є

TEST ITEMS AND RESULTS Ѓ م Є

،	Test Item Ѓ Є	Ref.Standard Ѓ ї ‼ Є	Test Conditions Ѓ ‚ Є	Note Ѓ Є	Conclusion Ѓ Є
1	Reflow Soldering Ѓ ƒ Є	JESD22-B106	Tsld=240 ŏ ,10sec	3 times	0/22
2	Temperature Cycle Ѓ Є	JESD22-A104	-20 ŏ 30min ū ŭ 15min 120 ŏ 30min	200 cycle	0/22
3	Thermal Shock Ѓ ‡ “ ¢ Є	JESD22-A106	-40 ŏ 15min ū ŭ 15sec 125 ŏ 15min	200 cycle	0/22
4	High Temperature Storage Ѓ Ў Є	JESD22-A103	T_a=100 ŏ	1000 hrs	0/22
5	Low Temperature Storage Ѓ u Ў Є	JESD22-A119	T_a=-40 ŏ	1000 hrs	0/22
6	Power temperature Cycling Ѓ ‹ u Є	JESD22-A105	On5min-40 ŏ >15min ū ŭ ū ŭ <15min Off5min100 ŏ >15min	200 cycle	0/22
7	Life Test Ѓ . Є	JESD22-A108	T_a=25 ŏ I_F=12mA	1000 hrs	0/22
8	High Humidity Heat Life Test Ѓ Є	JESD22-A101	60 ŏ RH=90% I_F=12mA	1000 hrs	0/22

19. Reflow profileŕ Є

SMD Reflow Soldering Instructionsŕ فخ ב Є

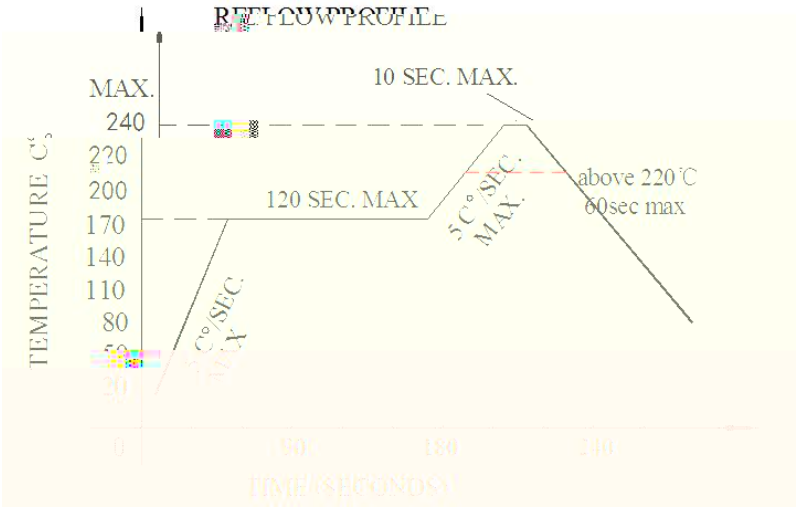

a. Reflow soldering should not be done more than two times

فخ Ғ 2

b. When soldering ,do not put stress on the LEDs during heating

Ï سٚ Ҳ Ғ ⊢ ɨ ɲ LED

Soldering ironŕ Є

a. When hand soldering, keep the temperature of the iron under 300ŏ , and at that temperature keep the time under 3 sec.

Ï ┼ سر 300ŏ ıı Ґ Ï ʒ Ғ˜ 3

b. The hand soldering should be done only a time ˜ ˜ ' Ж

Reworkŕ Є

a. Customer must finish rework within 5 sec under 240ŏ

Ḧ سر 240ŏ ıı Ґ Ï 5 `Y ɨ ƙ

b. The head of iron can not touch the LEDs

Ғ └ LED

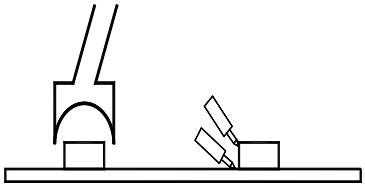

c. Twin-head type is preferred. ŭ ҿ ɾ

20. CAUTIONS Ѓ ε Є

Note for use ǝ ε

In order to ensure that IC lamp beads are used in SMT patch reflow welding and in the use of the process yield and stability of the product, the following procedures are specified after many tests:

ҿ Ӈ`Y IC ¸ ǝ سر SMT فخ م ǝ ǚ¸ ǝ Ï

┼ ıı Ґ¨ ĩ ε Ґ E

a ɻ Sample evaluation: Because this product is a built-in IC product, the overall process is different from conventional RGB products, so the customer side needs to carry out all-round verification during the sample evaluation to ensure the matching performance of the product Ж

ǝ æ E قح ¸ ǝ ҿ`Y IC¸ ǝ Ï φ ⌡ ɲ RGB¸ ǝ Ï ıı سر ǝ æ

`H r Ï Ӈ¸ ǝ ٧ Ж

b ɻ Incoming material inspection: ensure the vacuum packing is intact and there is no vacuum leakage. If there is vacuum leakage, please confirm whether the reflow welding is abnormal. If it is abnormal, please return to the factory for high-temperature dehumidification.

E Ӈ ~ Ï Ï فخ ∩ Ï

٨ Ж

c ɻ Use: Please confirm theeh fفɻ bkin inhkingipema s Ш h ך m i ך

d ɻ Maintenance: material should be completed within 4 hours and domestic demand after reflow soldering test and repair the lamp bead, such as more than 4 hours need to repair the lamp plate temperature above 65 ŏ dehumidification 12 hours to repair work, and repair the lamp bead also must carry on the low temperature above 65 ŏ dehumidification 12 hours, use prohibited in the process of maintenance with temperature over 240 ŏ heating machine repair, prohibit the whole plate placed in the heating stage repair, follow the principle of bad which return which measuring.

ḷ E فخسر u 4 `Y م ḷ Ï 4 ḷ u

65 ŏ 12 ıı ɒ ˜ ḷ ɨ ƙ Ï ʒ ḷ Й u 65 ŏ 12 ıı

ɒ ˜ ɐ Ï ḷ Ҳ 240 ŏ˝ ˆ ḷ Ï ɲ˝ ˆ ɒ ḷ Ï

گيسد گي ʎ ∑ ɾ

e ɻ Warm prompt: the whole process special considerations for light bead before use vacuum packing, dehumidification, SMT placement time and workshop of temperature and humidity control, product maintenance lamp plate if bare at room temperature environment for a long time need to dehumidification, light board and light bead light beads as LED electronic products, need to pay attention to moisture in spring and summer, autumn and winter anti-static, product quality is enterprise's life, to the quality strives for the survival, to the quality strives for the development is our consistent aim.Also in order to ensure the quality of the client, please strictly refer to the above recommendations

E γ ʃ ɛ ɐ ɐ ╦ ˜ ɻ u م

Ï˛ ʒ ḷ سر م Ï ɐ LED ɷ̈

ɔ Ł˛ ʒ Ï Ï ǁ Ï˛ ʒ ʒ ' ʊ ƙ ɾ Ï ıı Ï ıı
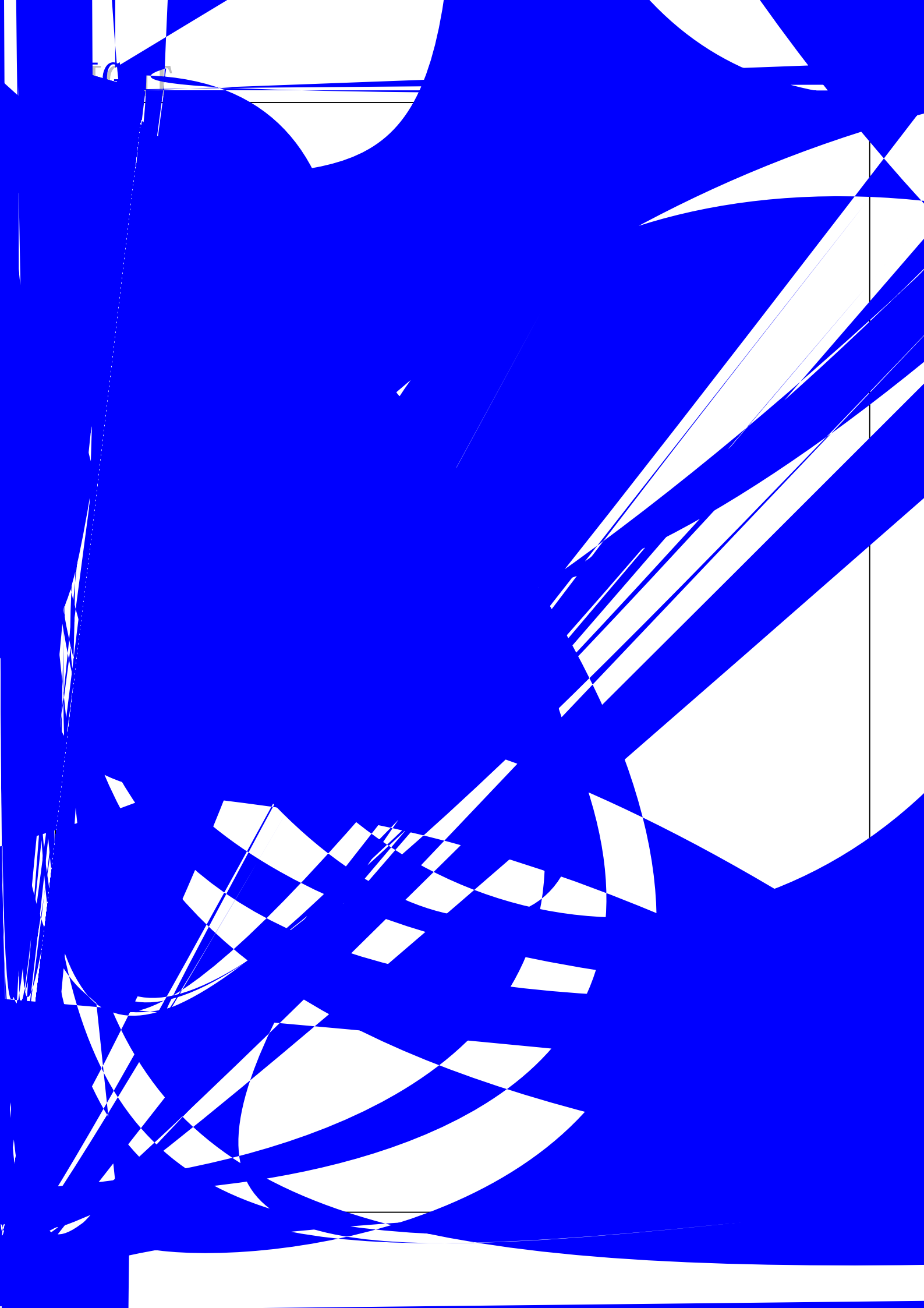
ǐ ´ ' ɾ Й ɐ Ḧ ʒ Ï Ç ǐ ıı ɒ ɨ ɾ